Asymod® 7 *Controller*

Asymmetrical Hi-Fi AM / eSSB Modulator

RANGER RCI 2995 DXCF **DARP+**

USER MANUAL

Asymod products are available at www.asymod.am
Customer support: asymod@asymod.am

Release Date: 6-27-2021

BLUTHUNDER Technologies

1- Roger Beep 1. Controls roger beep 1 at end of transmission length

2- Enable / disable Roger Beep 1 at key up

3- Enable / disable Roger Beep at end of transmission

4- AM demodulator monitor volume level for headphones only

5- Asymmetrical positive modulation amplitude gain. The ASYMMETRY is used to increase the loudness of the transmitted audio. It is not recommended to exceed ~125% to ~150% positive modulation.

6- AM modulation level. Controls AM modulation level when using Line In and Mic Jack inputs

7- AM Carrier level control sets AM Dead Key

8- Plays recorded on air audio content. Depress once plays full recording length. Can be changed to “play while you press” internally

9- Demod filter. AM Demodulator tone adjustment. Lowpass increases clockwise. High pass increases counterclockwise.

10- Record On. Press and keep pressed for the time of the recording, release to finish recording. 4 kHz @ 10 seconds max.

11- Hi and Low RF Power Control.

On the OFF position, the radio's RF power amplifier in bypassed. ~10 WPEP maximum. Great for low drive RF amplifiers.

On the ON position, the radio's RF power amplifier is enabled. Max rated RF power output. Ideal to drive high drive RF amplifiers.

12- Roger Beep 2. Controls Roger Beep 2 at end of transmission tone

13- Enable / disable Roger Beep 2

AM OPERATION

Initial Setup using hand mic

REAR PANEL	**CONDITION**	**COMMENTS**
VFO Whine Switch	OFF	Only works on AM. Make sure to turn OFF on SSB /FM
R.B. Switch	MIC	Diverts R.B. audio to Mic Jack or to Line In
Line In	NOTHING PLUGGED	Accepts unbalanced ¼" plug. Disables mick jack audio when inserted
FRONT PANEL		
MODE	AM	FM, AM, USB, LSB, CW
MIC GAIN	11 O'CLOCK	Front mic jack only, includes RB audio
POWER	ANY SETTING	Only works on SSB and FM modes
1 – RG-1		Adjusts RG-1 End Tone length

2 – RB-1 KEY UP	OFF	Enables RG-1 Ricochet (beginning of TX)
3- END	OFF	Enables End RB
4- LEVEL	OFF	Demodulator audio level (AM only)
5- ASYMMETRY	0	Adjusts positive modulation (AM only)
6- MODULATION	0	Adjusts TX modulation level (AM only)
7- CARRIER	0	Adjust dead key level (AM only)
9- FILTER	0	Adjusts Demodulated tone (AM only)
11- POWER	0	OFF: Dead key 0 to 4 watts ON: Dead key 4 to 20 watts
13- RB-2 KEY UP	OFF	Enables End RB-2

Table -1

There are 2 ways / methods to set up for 100 % modulation. One is using a true PEP RF Power Meter, the second is using an oscilloscope.

We will first show how to adjust using the PEP RF Power Meter.

Connect the antenna output of the radio to the input of a true PEP RF power meter @ a 50-watt scale. Connect output of RF power meter to a 50-ohm load. Connect hand mic to front mic jack. Power on radio. Make sure the system is well grounded.

Set up for 100% modulation:

NOTE:

Remember, 100 % modulation is always 4 times the dead key power in PEP watts (peak envelope power)

A 1 watt dead key swinging to 4 watts PEP is 100% modulation (1 x 4 = 4 WPEP)

A 2 watt dead key swinging to 8 watts PEP is 100% modulation (2 x 4 = 8 WPEP)

A 3 watt dead key swinging to 12 watts PEP is 100% modulation (3 x 4 = 12 WPEP)

A 4 watt dead key swinging to 16 watts PEP is 100% modulation (4 x 4 = 16 WPEP)

In other words, PEP power (watts) should be 4 times the dead key (carrier) to achieve 100% modulation.

Follow the modulation chart for proper operation.

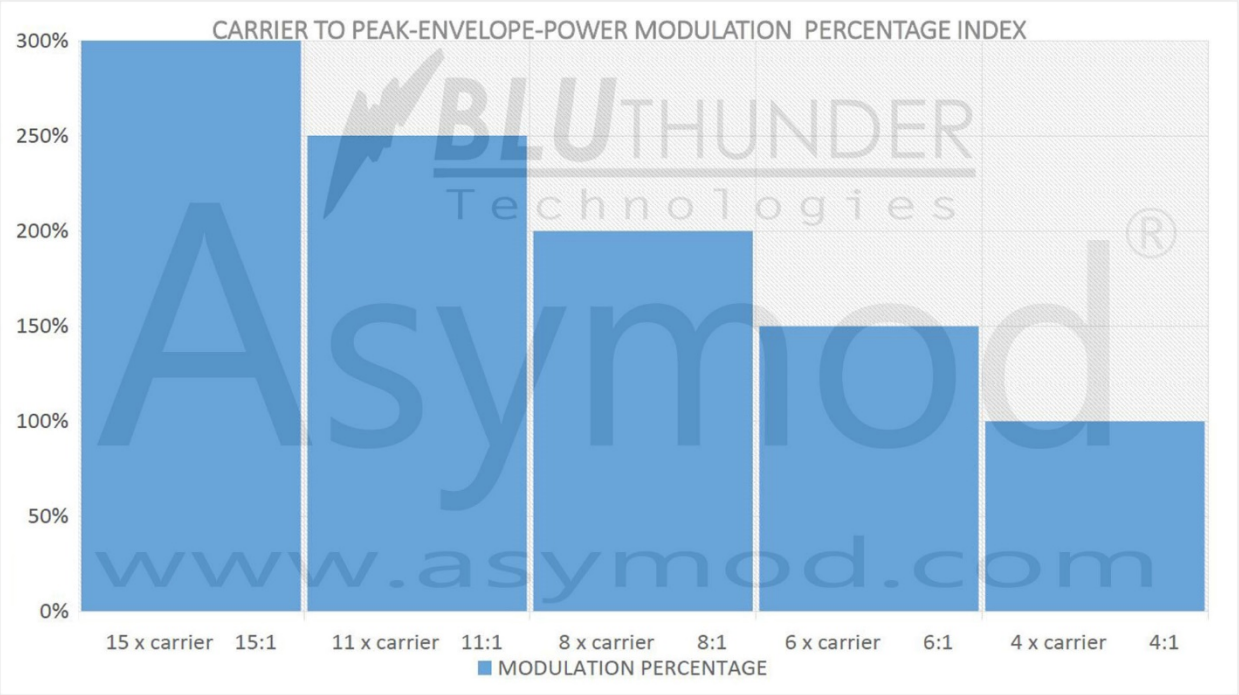

Low Power Setting Example:

Set the POWER switch to the OFF position to disable the radio's high-power RF amplifier.

Key up using hand mic, raise CARRIER control to 1 watt, talk into the hand mic at a steady tone of voice and 2 inches of distance from hand mic element. Raise the MODULATION control until four times the carrier is seen on the PEP power meter. The PEP power meter should be displaying 4 watts PEP while talking into the hand mic. At this point 100 % modulation has been set.

Using the ASYMMETRY control

The ASYMMETRY is used to increase the loudness of the transmitted audio. It is not recommended to exceed ~120% to ~150% positive modulation.

Once 100% modulation has been set, then Asymmetry can be adjusted to achieve 20% power gain. This will set the modulation to 120%

To increase loudness, increase the ASYMMETRY control until 20% PEP power gain is seen on the PEP RF power meter. This will set the modulation at 120 % which is the recommended maximum positive modulation.

In the case above, 100% modulation is 4 watts PEP. So, to increase asymmetry to a 20% gain calculate the following:

4 watts times 20 percent equals .8 watts.

So, 4 x .20 = .8

Then, 4 watts plus .8 watts = 4.8watts PEP.

To set modulation to 120% positive, raise the ASYMMETRY control until 4.8 watts PEP is seen on the PEP meter while talking into the hand mic at a steady tone of voice and 2 inches of distance from hand mic element.

It is possible to set the positive modulation above ~120% to ~150 %, however if doing so, the transmitted audio should be monitored on a standard receiver to maintain a clean transmission. Not all receivers can demodulate positive modulation above ~120% to ~150 % and anything above will be cut off by the receiving receiver and will sound distorted to the ear.

High Power Setting Example:

Set the POWER switch to the ON position to enable the radio's high-power RF amplifier.

Key up using hand mic, raise CARRIER control to 10 watts, talk into the hand mic at a steady tone of voice and 2 inches of distance from hand mic element. Raise the MODULATION control until four times the carrier is seen on the PEP power meter. The PEP power meter should be displaying 40 watts PEP while talking into the hand mic. At this point 100 % modulation has been set.

Raise Asymmetry to achieve 20% power gain.

To increase loudness, increase the ASYMMETRY control until 20% PEP power gain is seen on the PEP RF power meter. This will set the modulation at 120 % which is the recommended maximum positive modulation.

With a 10-watt dead key, 100% modulation is 40 watts PEP. So, to increase asymmetry to a 20% gain calculate the following:

40 watts times 20 percent equals .8 watts.

So, 40 x .20 = 8

Then, 40 watts plus 8 watts = 48watts PEP.

To set modulation to 120% positive, raise the ASYMMETRY control until 48 watts PEP is seen on the PEP meter while talking into the hand mic at a steady tone of voice and 2 inches of distance from hand mic element.

It is possible to set the positive modulation above ~120% to ~150 %, however if doing so, the transmitted audio should be monitored on a standard receiver to maintain a clean transmission. Not all receivers can demodulate positive modulation above ~120% to ~150 % and anything above will be cut off by the receiving receiver and will sound distorted to the ear.

Initial Setup using Line In

It is recommended to use an audio cable jumper with a built in 1:1, 600 Ohm audio transformer as seen below to eliminate line noise from the audio process equipment, whether using computer-based audio processing or standalone pro rack gear. Note: Pay close attention to the wiring and ground connections when making this jumper.

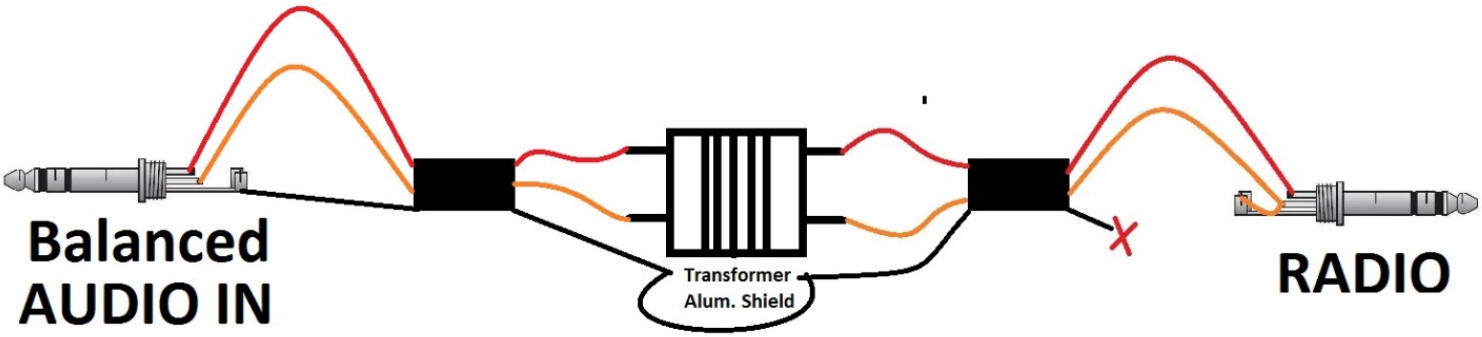

Figure 1.

To set up for 100% modulation using the Line In, connect the output of your audio process chain into the Line In connector using a mono ¼” male connector (1/4” TS male connector) and follow the same instructions used with the hand mic above but using the studio mic running audio processing instead.

Alternatively, run a 800 Hz tone into the Line In connector instead of voice (use a sine wave at about .8 volts peak to peak, same as .4 volts peak as a starting point) into the Line In connector and follow the procedure above.

Initial Setup Using an Oscilloscope

Voice can be used to set up the initial settings when using an oscilloscope, but it is recommended to use a 800 Hz sine wave using a signal generator for better accuracy.

Connect the antenna output of the radio to the input of a RF power meter @ a 50-watt scale. Connect output of RF power meter to a 50-ohm load. Connect hand mic to front mic jack or PTT switch to the PA jack. Power on radio. Make sure the system is well grounded.

Set up for 100% modulation:

Example: Set up for a 2-watt dead key.

Put all settings as seen in table 1 except for the Line In. Connect the output of a signal generator to the Line in connector. This will disable the audio from the hand mic, at this point the hand mic will only function as a PTT switch.

Key up using the hand mic or a PTT mouse or switch connected to the radio's PA jack which has been converted to a PTT jack.

Raise the CARRIER until 2 watts are seen on a RF power meter.

Adjust the reference in the oscilloscope; adjust the oscilloscope's vertical (Y-axis, Volts/Div) adjustment to cover two divisions.

Enable the signal generator and generate a 800 Hz tone into the Line In connector (use a sine wave at about .8 volts peak to peak, same as .4 volts peak as a starting point) into the Line In connector.

Raise the MODULATION until 100% modulation is reached.

Last, raise the ASYMMETRY to reach the desired positive modulation.

Disable the signal generator and disconnect from the Line In connector.

Connect the output of the audio process chain into the Line In and adjust its audio output until the same positive modulation is seen on the oscilloscope as with the signal generator.

Demod Adjustments

Once the Asymod settings are set, you can proceed and adjust the Demod and Playback Recorder levels.

The Demod should be adjusted next. Connect a good quality headphone with good earmuffs to avoid feedback and adjust the Demod to a comfortable listening level as you transmit and talk into the mic. Adjust the FILTER as needed. Next, stop transmitting and adjust the radio's receiver volume to a comfortable level close to that of the Demod so the receive and transmit audio are about the same level.

Recorder / Playback adjustment

Once the Asymod settings and Demod settings are set, the recorder input and output levels can be adjusted. Input and output potentiometers should be set to the center position as a starting point. Press the record button and record. You can record while transmitting or receiving. Transmit and talk while pressing the RECORD button and note the PEP RF power output as seen on the PEP RF power meter or modulation as seen on the oscilloscope, keep transmitting and stop talking, release the RECORD button and depress (push once and let go) the PLAY button. You should hear your voice played back as it was recorded via the Demod and heard on the headphones. Adjust the Input and Output levels of the Recorder as needed so that the playback audio produces the same levels of PEP RF power or modulation as seen on the oscilloscope. At this point the recorder playback output should be at the same level of the modulation and receive audio.

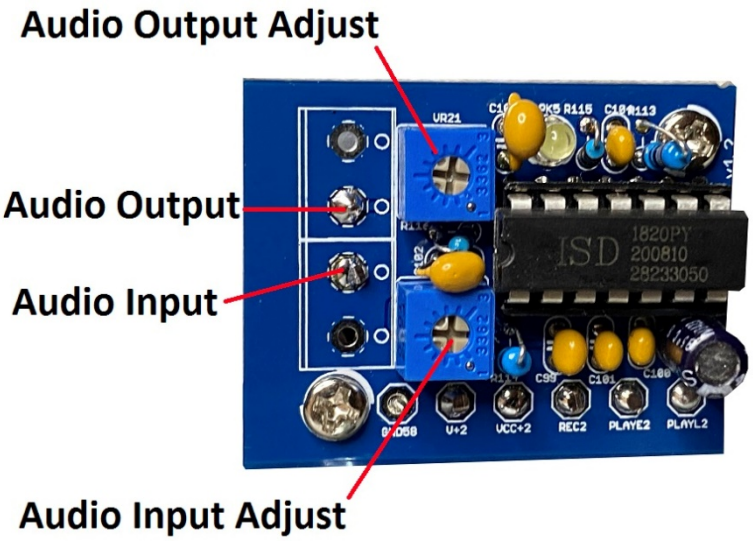

Roger Beep Functions

RG-1 produces a ½ a second Ricochet sound when you key up (KEY UP) and another Richochet sound when you unkey (END) which is the roger beep. Both effects can be defeated by turning off the KEY UP (2) and END (3) switches. The END roger beep sound length can be controlled by adjusting the RG-1 potentiometer (1).

RG-2 produces a one second roger beep that can be defeated by turning off the KEY UP (13) switch. The tone of the roger beep can be controlled by adjusting the RG-2 potentiometer (12).

NOTE: Roger beep and Ricochet effects can be diverted to the front mic jack when running a hand mic connected to the front mic jack and no connector is plugged into the Line In connector or to the Asymod board when using the Line In. Refer to the R.B. switch (1) seen in the image below.

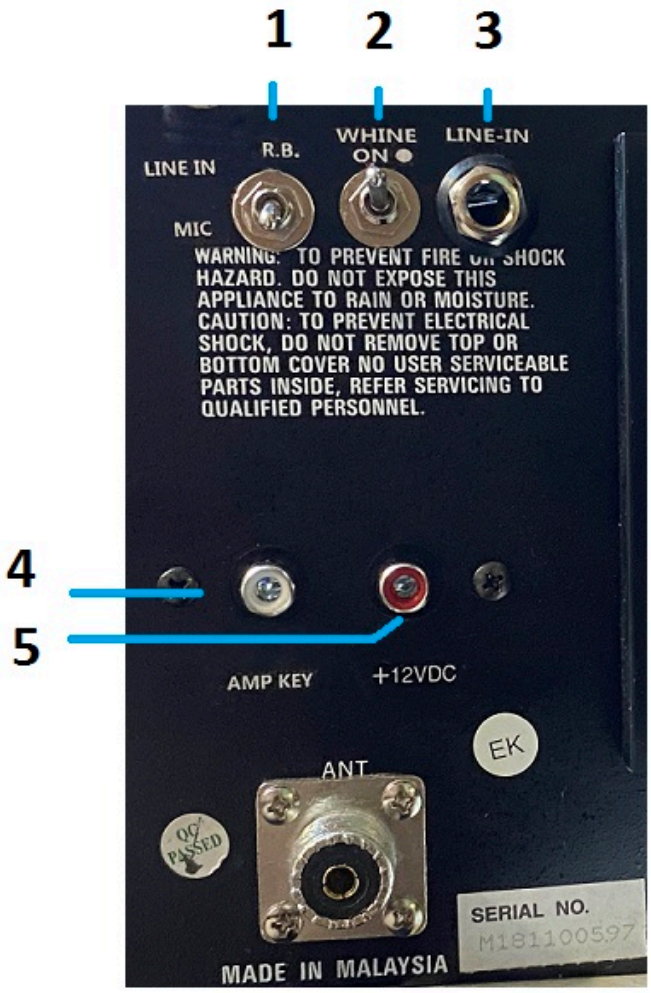

1- R.B. switch diverts roger beep effects to either the front mic jack or the Line In input.

2- VFO Whine Effect. Only works while on AM. Make sure to disable if on SSB or FM. When enabled, the radio will start transmitting a few kHz off frequency and quickly drifts within a few seconds into the fundamental frequency. This drift causes a heterodyne effect when heard by a third party listening to the drifting signal as it approaches zero beat against other signals on the air. To test, transmit and listen on a SSB receiver set to LSB.

   The VFO whine is enabled by the switch in the rear panel. This causes the TX frequency to start off about 5 kHz from the channel's assigned frequency and move toward the channel's assigned frequency within about 3 seconds after the PTT is pressed. Once the PTT is pressed again, the process repeats. This drift in frequency causes what is known as the heterodyne effect once the TX signal clashes against another RF signal, giving the receiving station that is receiving both signals simultaneously, the sound of a squealing whine. This was originally aroused due to the capacitor glitch in the Browning Golden Eagle radio's feedback squeal when keying up back in the 70's.

3- Line In input accepts unbalanced line level audio only. 1 VPP input. When a ¼" TS audio connector in plugged in, the front jack hand mic audio is interrupted and disabled. Use a jumper as seen in Figure 1.

4- AMP KEY RCA jack. Connect to key RF power amplifiers directly.

5- FAN 12 V RCA jack. A fan noise filter has been installed in this unit.

Effects for hand mic

To set the RG effects when using the hand mic connected to the front mic jack and nothing connected to the Line In, set this switch to the "MIC" position.

Effects for Line In to Asymod

To set the RG effects when using the Line In input at the rear panel, set this switch to the "LINE IN" position.

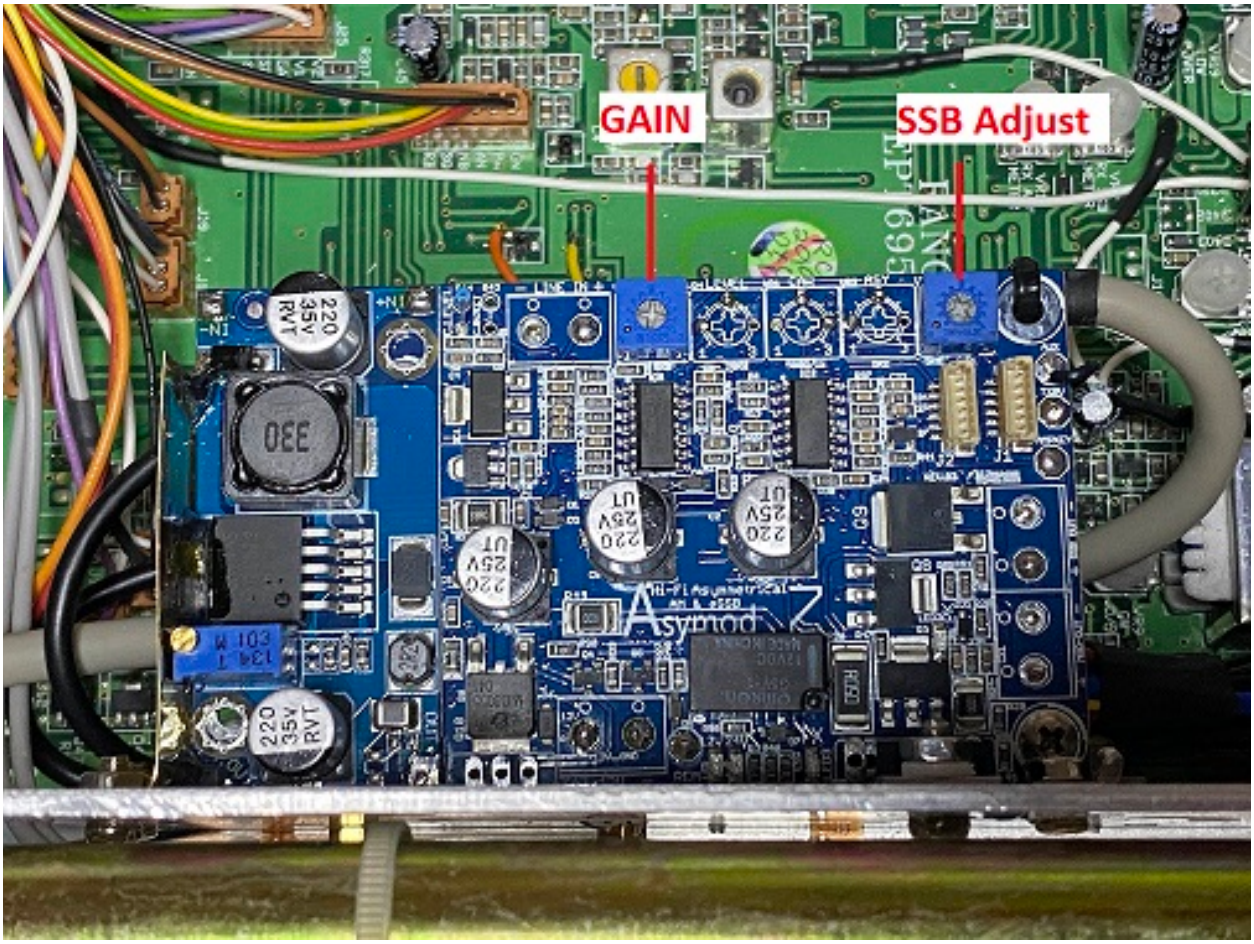

Figure 2.

The GAIN should be increased if audio levels are not high enough to drive the Asymod board.

To adjust the SSB audio level, set the radio for LSB or USB, set the radio's power control potentiometer in the front panel to max, set the mic gain to 12 O'clock and speak into the mic, raise the SSB pot slowly until power on an RF PEP power meter is at max, then back it up until it begins to fall below max power and leave it there. The same procedure can be done using the Line In.

An electrical noise filter has been installed in line with the supply power to the display unit to eliminate switching electrical noise.

Asymod 7

- The modulation Level control allows for final audio control and is set in combination with the Carrier and Asymmetry controls to achieve the level on modulation desired.

- Carrier control sets the reference carrier level (dead key) to set the modulation and asymmetry levels.

- The Asymmetry control maintains the negative peaks at -100% modulation while allowing for positive peaks of excess of 300% without pinching or clipping.

  As reference, follow the below modulation chart for proper operation.

  The transceiver/radio is only the exciter and should not be expected to generate high levels of RF power, it should be expected, however, to generate a clean, perfectly modulated wide-band Hi-Fi audio RF signal well within the limits of the headroom available without pinching or clipping at the crest or troughs of the modulation envelope which can be later amplified with a class AB, RF power amplifier and is best heard or monitored using the Demod function or on a good quality receiver equipped with a 6 kHz AM wideband filter while monitored on an oscilloscope.

  The Asymod is not an audio processor, but it does allow for full bandwidth usage control with Pro Tools, a combination of rack gear, a multi band mastering processor, such as the DEQ2496 or an AM broadcast processor.

  Audio processing and a high quality microphone is necessary for optimum performance.

  Audio processing for mobile or base operation is possible with the use of the iRig PRE or iRig PRO interface using the companion IK Multimedia's VocalLive Vocal Processor app (not the free version) on your iOS device.

  Audio processing for base operation is possible with the use of rack audio processing gear or computer based processing such as Pro Tools for PC or Mac along with its companion interface such as the Mbox 2 Mini or newer. Pro Tools is the best choice and is highly recommended. Pro Tools sessions are free and available for download.

  The Asymod 6 is NOT designed to give transceivers more RF power, more swing, or loud distorted modulation. It is however, to be used in conjunction with a properly set audio

processing scheme to produce the loudness, punch, depth, and audio bandwidth with enhanced performance in tone, smoothness and dynamic range of a broadcast quality transmission which is what makes it stand out from the rest.

A Word about Audio Processing

Loudness and coverage are increased by reducing the peak-to-average ratio of the audio. If peaks are reduced, the average level can be increased within the permitted modulation limits. The effectiveness with which this can be accomplished without introducing objectionable side effects (like clipping distortion) is the single best measure of audio processing effectiveness.

Density is the extent to which the short-term RMS amplitude of audio envelope peaks is made uniform (at the expense of dynamic range). Programs with large amounts of short-term dynamic range have low density; highly compressed programs have high density. Reducing the peak-to-average ratio of the audio increases loudness. If peaks are reduced, the average level can be increased within the permitted modulation limits. The effectiveness with which this can be accomplished without introducing objectionable side effects (such as pumping or intermodulation distortion) is the single best measure of audio processing effectiveness.

Compression reduces the difference in level between the soft and loud sounds to make more efficient use of permitted peak level limits, resulting in a subjective increase in the loudness of soft sounds. It cannot make loud sounds seem louder. Compression reduces dynamic range relatively slowly in a manner similar to riding the gain: Limiting and clipping, on the other hand, reduce the short-term peak-to average ratio of the audio.

Limiting increases audio density. Increasing density can make loud sounds seem louder, but can also result in an unattractive busier, flatter, or denser sound. It is important to be aware of the many negative subjective side effects of excessive density when setting controls that affect the density of the processed sound.

Clipping sharp peaks does not produce any audible side effects when done moderately. Excessive clipping will be perceived as audible distortion.

Look-ahead limiting is limiting that prevents overshoots by examining a few milliseconds of the unprocessed sound before it is limited. This way the limiter can anticipate peaks that are coming up.

Demod

- The AM Demodulator allows real time monitoring of the transmitted signal. The audio output of the AM detector / demodulator is transparent. The AM audio is extracted from the RF output stage via the Demod's AM detector providing exact sampling of the TX audio to the headphone jack in the front panel. The Level control is the Demod's volume control while the Filter control provides a tone control of the Demod's audio.

  The Demod's audio is only available at the front panel's headphone jack. When the headphones are disconnected the RX audio will come out the speaker as expected but the Demod's audio will not. This is to avoid feedback while TX.

RF SAMPLER

An RF sample for your oscilloscope can be obtained at the rear panel "RF SAMPLE" BNC connector.

Specifications

Asymod 6 absolute maximum ratings

Audio input:
+4 dBu, 1.74 VPK or 1.23 VRMS

Power supply:
+15 volt supply @ 5A

Remote control sensitivity:
+8V ~ +12 V

Asymod 6 Specifications:
Audio Input Range: Audio input: -30 dBu to +4 dBu

Frequency response:
Input: 20 Hz – 11 kHz. Expandable to 20 kHz.
Output: 20 Hz – 11 kHz. Expandable to 20 kHz.

Total System Distortion (@ 300% modulation):
<0.01% THD 20 Hz – 1 kHz
<0.02% THD 1 kHz – 5 kHz
<0.03% THD 5 kHz – 14 kHz
<0.05% THD 14 kHz – 24 kHz

Input & Output Passive Low Pass Filter:
Selectable: 5 kHz, 8 kHz, 11 kHz or 20 kHz

Preamplifier Active Low Pass Filter:
Selectable: 8 kHz, 16 kHz

Transceiver Specifications:

AM TX:

Carrier: 1 - 10 Watts
Peak Envelope Power: 11 - 150 Watts
Modulation: 100% – 350%
TX Bandwidth: Up to 20 kHz (dependent on audio process roll-off)

AM RX:
Bandwidth: +/- 7.5 kHz
Att Band Width: +/- 15 kHz

Stop Band Att 455/ +/- 100 kHz: 40 dB
Audio amp response: 15+ kHz

SSB TX:
Peak Envelope Power: 10 - 150 Watts
TX Bandwidth: Up to 4.7 kHz (dependent on audio process roll-off)

SSB RX:
Bandwidth: +/- 2.5 kHz
-3dB Bandwidth: +/- 4.5 kHz
Audio Amplifier Frequency Response: 15+ kHz

Customer support: asymod@asymod.am

Release Date: 5-30-2020

BLUTHUNDER Technologies